C4W36RA-DQBD2FE1

Server Technology's PRO4X Switched PDUs run on our state-of-the-art Xerus network interface platform and provide remote access to power, PDU status, input and branch current monitoring, and outlet on/off control. The PDU features RamLock, a self-locking mechanism to prevent accidental cord disconnects, and our award-winning HDOT Cx outlets that can be deployed as either a C13 or C19. Switched PDUs are secured with strong configurable password, active directory, 256-bit AES encryption, SSH, SSL and HTTPS support. SNMP traps provide automated alerts on power and environmental conditions from Legrand's plug-and-play environmental monitoring sensors like temperature, humidity, water, dry contact closure, airflow, air pressure differential, and more.

Key Features

HDOT Cx Outlets
Cx is the future-ready UL tested hybrid of a C13 and C19 outlet accommodating both C14 and C20 plugs.

Network Monitoring
Gain access to valuable data through connections including HTTP(S), SSH, Telnet, SNMP, (S)FTP, SMTP, Syslog, LDAP(S), RS-232 serial, and more.

Multi-Color LCD
An easy-to-read LCD provides a local indication of power usage, alerts, and alarms.

Power Quality Measurements
Monitor and alert on the power being fed to the PDU for harmonics, voltage dips and swells, crest factor, and more at the outlet or load.

Waveform Capture
Capture voltage and current waveforms automatically or upon demand.

Environmental Monitoring
Support up to 12 daisy chained DX2-series SmartSensors, each with the ability to send SNMP-based alerts and email notifications.

Branch Circuit Protection
This PDU meets the UL and IEC 62368-1 requirement for branch circuit protection through UL 489 rated magnetic-hydraulic circuit breakers or UL 248 fuses.

Alternating-Phase Outlets
Evenly distributes multiple phases of power to each outlet for simplified load balancing, reduced cord lengths, and better airflow.

Flexible Mounting
Includes standard button mounts along with provisions for custom mounting brackets.

45 Degree Angled Infeed
The angled infeed improves accessibility, provides infeed strain relief, and its bend radius is suitable with 60A rated cords.

Multi-Unit Linking & Cascading
Daisy chain up to 16 PDUs from a primary PDU using a USB or Ethernet connection through a single IP address.

Hot Swappable Controller
The Controller is the PDU's center of intelligence and houses computing, display, and connectivity ports.

RGB LED Outlet Indicators
RGB LEDs identify an outlet's on/off state, if it's above/below a certain power threshold, or if it's in suspect of a power measurement irregularity.

RamLock Locking Outlets
A mechanical locking mechanism built to secure the broadest range of C14 and C20 plugs in place.

Per-Inlet Power Sensing
PIPS® (Per Inlet Power Sensing) Monitors Current Load (A), Voltage (V), Power (W), Apparent Power (VA), Crest Factor, Power Factor, & Energy per inlet.

Outlet Control
On Switched PDUs, cycle power to individual outlets or groups of outlets to reboot servers, or power off unused receptacles.

High Temperature Rating
This product has been tested and approved for safe and reliable operation in 60 °C data center environments.

Color-Coded Options
Select from six colors to designate PDU circuits in the data center — black, white, red, green, blue, and yellow.

Inputs

Input Voltage (V):	208
Frequency	50/60 Hz
Input Plug:	208V Delta 60A IEC 60309 3P+G 9Hr
Input Current (A):	60
Input Current Rated (A):	48
Input Power Capacity (kW):	17.3

Outputs

Connector	Rating
(12) x IEC 60320/C13	North American Rating: ≤ 12A @208V L-L (15A Peak)
(24) x Cx	North American Rating: ≤ 16A @208V L-L (20A Peak)

The Cx outlet has superior cable retention. Moderate force is required when plugging in a C14 or C20 connector to fully seat the plug and to ensure proper installation. An incorrectly installed plug will be loose and will not provide a reliable connection.

Outlet #1 opposite the power input

PDU Configuration Details

Examples:

C4W36RA-0ABE2FE2/**00 00** - PDU with C20 inlet, black paint, and overlays

C4W36RA-YCBE2EE3/**30 B1** - PDU with standard 3 m input cord, black paint, blue markings

Input Cord Length or Other		
C20 Inlet, Input Terminal Block	00	
1m / 3.3ft	10	
1.5m / 4.9ft	15	
2m / 6.6ft	20	
2.5m / 8.2ft	25	
3m / 9.8ft (standard)	30	
3.5m / 11.5ft	35	
4m / 13.1ft	40	
4.5m / 14.8ft	45	
5m / 16.4ft*	50	
PDU Paint Color / Overlay Colors		
Black Paint, Black Labels		00
Black Paint, Red Labels		R1
Black Paint, Blue Labels		B1
Black Paint, Green Labels		G1
Black Paint, Orange Labels		N1
Black Paint, Yellow Labels		Y1
Black Paint, White Labels		W1

*Note: * Not available in North America*

Branch Circuit Protection

UL 489, CSA C22.2 No. 5 & IEC/EN 60947-2 Compliant 2-pole, 20A trip circuit breakers, six (6) branch, rating: ≤ 16A, 10 kAIC Interrupt Rating

Physical

Dimensions: 70.0in tall x 2.2in wide x 2.5in deep [1778mm x 56mm x 64mm]

Environmental

Operating Environment: 32°F to 140°F / 0°C to 60°C | 5% RH to 90% RH non-condensing | < 3000M / 10,000 ft. elevation
Storage Environment: -22°F to 176°F / -30°C to 80°C | 20% RH to 90% RH non-condensing | < 15,000M / 50,000 ft. elevation
Quiescent / Unloaded Power Draw: < 7W for all configurations

Communications & Security

Dual Ethernet, Two (2) 10/100/1000 Mbps (Cat5e/6 connector), Optional Wi-Fi (802.11 a/b/g/n) One (1) Sensor port (RJ45), One (1) PDU Link (RJ45),

Two (2) USB-A (5 V / 500 mA), and One (1) USB-B
Web-browser GUI and command-line interface (CLI): HTTP/HTTPS, TLSv1.2, SSHv2, Telnet, SNMPv2c and v3 (GET, SET, Traps), IPv4 and IPv6, LDAPv3/LDAPS, TACACS+, RADIUS, FTP/SFTP

Certifications

North American:
Safety (Listed & Certified, cTUVus mark)
  UL 62368-1
  CSA C22.2 No. 62368-1
EMC
  FCC Part 15 Subpart B Sections 15.107 & 15.109, Class A
  CAN ICES-003, Class A

Measurement Accuracy

Input Measurement Accuracy:

LCD Current = ± 0.2% at 0.01 amp resolution
GUI Current = ± 0.2% at 0.01 amp resolution
Voltage = ± 0.2% at 0.1 volt resolution
Neutral Voltage = ± 1% at 0.1 volt resolution
Neutral Current = ± 0.5% at 1% FS resolution (FS is PDU ampere rating)
Active Power = ± 0.5% at 1 watt resolution
Apparent Power = ± 0.5% at 1 volt-amp resolution
Reactive Power = ± 1% at 1 volt-amp reactive resolution
Power Factor = ± 1% at 0.01 resolution
Crest Factor = ± 1% at 0.1 resolution
Active Energy = ± 0.5% at 0.1 kilowatt-hour resolution
Apparent Energy = ± 0.5% at 0.1 kilo volt ampere hour resolution
Reactive Energy = ± 1.0% at 0.1 kilo volt ampere reactive hour resolution
Voltage Total Harmonic Distortion = 1.0%
Current Total Harmonic Distortion = 5.0%

Output Measurement Accuracy:

LCD Current = ± 0.2% at 0.01 amp resolution
GUI Current = ± 0.2% at 0.01 amp resolution
Voltage = ± 0.2% at 0.1 volt resolution
Active Power = ± 0.5% at 1 watt resolution
Apparent Power = ± 0.5% at 1 volt-amp resolution
Reactive Power = ± 1% at 1 volt-amp reactive resolution
Power Factor = ± 1% at 0.01 resolution
Crest Factor = ± 1% at 0.1 resolution
Active Energy = ± 0.5% at 0.1 kilowatt-hour resolution
Reactive Energy = ± 1.0% at 0.1 kilo volt ampere reactive hour resolution
Voltage Total Harmonic Distortion = 1.0%
Current Total Harmonic Distortion = 5.0%

Branch Measurement Accuracy:

Current = ± 1% at 0.01 amp resolution

Optional Accessories

PDU Linking/Cascading uses standard RJ45 cables.
Button Mounts (KIT-0020) are included with vertical PDUs for tool-less mounting (see diagram).
Horizontal PDUs will include a set of RU mounting brackets. See the Mounting Bracket Guide for further suggestions.

USB Dongle Accessories*:

WI-FI Access (DX2-WIFI-USB)
KVM and Serial Access (DSER-PWR-USB-G4, DKX3-PWR-USB-G4, DSER-CLI-USB-G4)

Legrand SmartSensors*:

Temperature (DX2-T1)
Temperature and Humidity (DX2-T1H1, DX2-T2H2, DX2-T3H1)
Temperature and Differential Air Pressure (DX2-T1DP1)
Airflow (DX2-AF1)
Dust/Particles (DX2-PS)
Water/Leak Floor (DX2-WSF-35-KIT, DX2-WSF-70-KIT, DX2-WSF-100-KIT)
Water/Leak Rope (DX2-WSC-35-KIT, DX2-WSC-70-KIT, DX2-WSC-100-KIT)
Dry Contact (DX2-D2)
Dry Contact/Contact Closure (DX2-D2C6)
Powered Dry Contact (DX2-PD2)
Powered Dry Contact/Contact Closure (DX2-PD2C5)
Contact Closure (DX2-CC2)
Proximity/Motion and Tamper (DX2-PIR)
Vibration (DX2-VBR)
Sensor Hub (DX2-ENVHUB4)

Legrand SmartLock*:

Intelligent Door Sensor (DX2-DH2C2)
Supports multiple low- and high-frequency door handles.

Legrand Asset Management*:

Asset Management Sensor Strip for 42U rack (AMS2-42)
Asset Management Sensor Strip for 45U rack (AMS2-45)
Asset Management Sensor Strip for 48U rack (AMS2-48)
Asset Management Sensor Strip for 54U rack (AMS2-54)

*Connecting certain accessories may require a firmware update. Accessories are sold separately.

Drawings

NOTES:

1. DIMENSIONS ARE IN MILLIMETERS AND [ ] BRACKETS ARE IN INCHES.
2. DIMENSIONS ARE NOMINAL. INFORMATION SUBJECT TO CHANGE WITHOUT NOTICE.

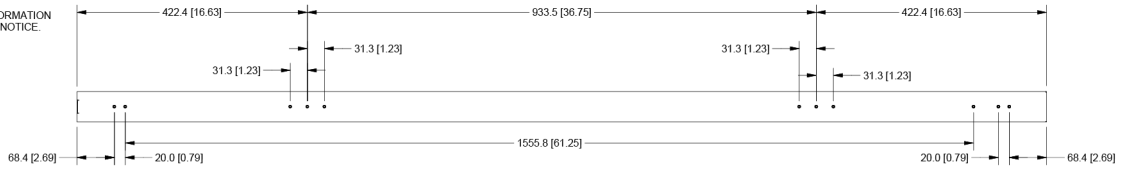

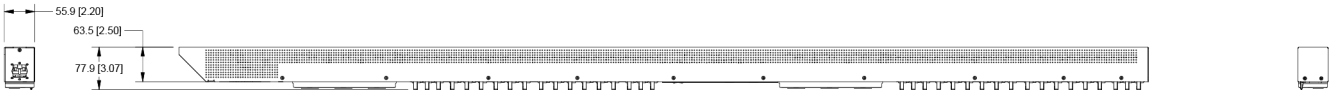

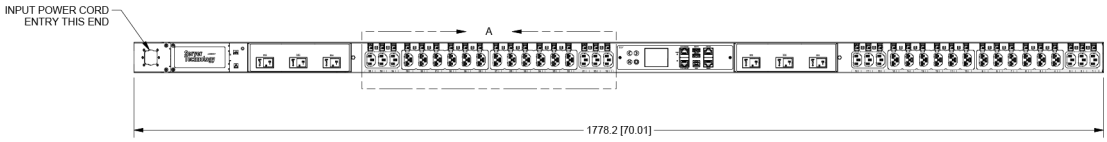

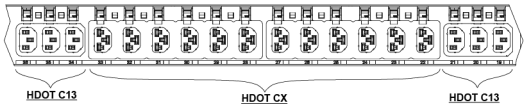

DETAIL A

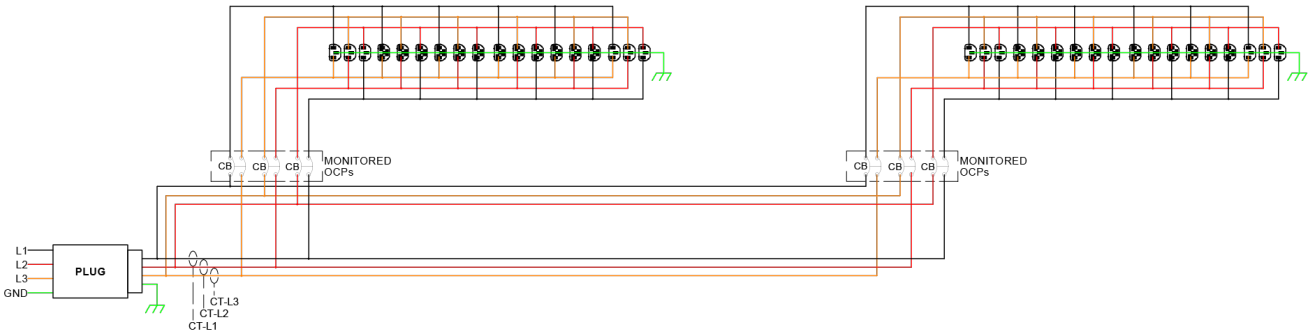

Additional Information

Warranty: Server Technology offers a standard 2-year limited parts & labor warranty. Extended support is available at the time of purchase. See the Support Options on the website, or contact your local Server Technology representative for more information.

Patents: Information on Server Technology patents is available on the website at: www.servertech.com/products/patents

"Global" models are typically for use in countries outside of North America. Contact your Server Technology representative for more information about which models are appropriate for your application.

Information in this document is current as of time of publishing. Contact your Server Technology representative for the most up-to-date information. This datasheet was generated on: 12-Oct-2024

Interested in learning more about how Server Technology can help you manage and distribute power in your datacenter?
Visit us online at: www.servertech.com/products/

To contact an expert in your region, go to www.servertech.com/about-us/office-locations for more information.

servertech.com ©2024 Legrand. All rights reserved. The industry-leading brands of Raritan, Server Technology, Starline, and Ortronics empower Legrand's Data, Power & Control to deliver innovative solutions for data centers, building networks, and facility infrastructures.