# C2WG24BN-YCLN5D6 (Primary)

### C2XG24BN-YCLN5D6 (Link)

The Server Technology® PRO2 Switched POPS PDU provides control of outlet power and local LED input current monitoring, allowing IT personnel to determine safe levels of loading on a per-phase basis while installing equipment into the rack/cabinet. The integral PIPS® and POPS® technology provides billing-grade accurate measurement of current, voltage, active power, apparent power, power factor, crest factor, and accumulated energy at the input and at each output. These power data points, along with temperature and humidity measurements (provided via optional probes), are accessible through the built-in Web and CLI interfaces as well as through SNMP. The PRO2 Switched POPS "Primary" PDU can be connected to as many as three (with optional module) PRO2 Switched POPS "Link" PDUs to extend the network access to the redundant or secondary power feed without the risks of a daisy chain linking configuration.

## Key Features

**Network Monitoring**
Gain access to valuable data through connections including HTTP(S), SSH, Telnet, SNMP, (S)FTP, SMTP, Syslog, LDAP(S), RS-232 serial, and more.

**Hot-Swap Network Card**
Network access is ensured when power is lost to the Primary unit with backup power provided by the Linked unit.

**Star Multi-Linking**
PRO2 provides the ability to link up to four power circuits using one IP address. Primary Expansion PDU provides backup power to network card.

**Temperature/Humidity Monitoring**
Primary and Expansion (select products) units each support two external 10' (3m) T/H probes. Receive SNMP-based alerts and email notifications.

**Auto-Flip Current Display**
Easy-to-read LEDs display current per phase to help prevent overloads and simplify three-phase load balancing in high-density cabinets.

**Per-Inlet Power Sensing**
PIPS® (Per Inlet Power Sensing) Monitors Current Load (A), Voltage (V), Power (W), Apparent Power (VA), Crest Factor, Power Factor, & Energy per inlet.

**Per-Outlet Power Sensing**
POPS® (Per Outlet Power Sensing) Monitors Current Load (A), Voltage (V), Power (W), Apparent Power (VA), Crest Factor, Power Factor, and Energy per outlet.

**Branch Current Monitoring**
Monitors current at each breaker branch and provides SNMP-based alerts and emails on high usage that risks a tripped circuit.

**Branch Circuit Protection**
This PDU meets the UL and IEC 62368-1 requirement for branch circuit protection through UL 489 rated magnetic-hydraulic circuit breakers or UL 248 fuses.

**Outlet Control**
On Switched PDUs, cycle power to individual outlets or groups of outlets to reboot servers, or power off unused receptacles.

**HDOT (High Density Outlet Technology)**
The highest outlet density available in a network connected PDU. Meets IEC C13 and C19 specifications, plus high native retention, and UL94V-0 flame rating.

**Color-Coded Options**
Select from six colors to designate PDU circuits in the data center — black, white, red, green, blue, and yellow.

## Inputs

| | |
|---|---|
| Input Voltage (V): | 208 |
| Frequency | 50/60 Hz |
| Input Plug: | NEMA L21-30P |
| Input Current (A): | 30 |
| Input Current Rated (A): | 24 |
| Input Power Capacity (kW): | 8.6 |

## Outputs

| Connector | Rating |
|---|---|
| (18) x IEC 60320/C13 | North American Rating: ≤ 12A @208V L-L (15A Peak) |
| (6) x IEC 60320/C19 | North American Rating: ≤ 16A @208V L-L (20A Peak) |

## Branch Circuit Protection

UL 489, CSA C22.2 No. 5 & IEC/EN 60947-2 Compliant 2-pole, 20A trip circuit breakers, three (3) branch, rating: ≤ 16A, 10 kAIC (North America) / (5 kAIC ROW) Interrupt Rating

## Physical

Dimensions: 3.5in tall x 17.2in wide x 17.5in deep [89mm x 437mm x 445mm]

## Environmental

**Operating Environment:** 32°F to 122°F / 0°C to 50°C | 8%RH to 90%RH non-condensing | 6,500ft/2km elevation
**Storage Environment:** -40°F to 185°F / -40°C to 85°C | 8%RH to 90%RH non-condensing | 50,000ft/15km elevation
**Quiescent / Unloaded Power Draw:** < 10W for all configurations

## Communications & Security

10/100/1000 Mbps Ethernet (RJ-45 connector), RS-232 serial (RJ-45 connector)
Two (2) temperature/humidity sensor inputs (4P4C), Link port (RJ-12) - {also on Link PDU}
Web-browser GUI and command-line interface (CLI): HTTP/HTTPS, TLSv1.2, SSHv2, Telnet, SNMPv2c and v3 (GET, SET, Traps), IPv4 and IPv6, LDAPv3/LDAPS, TACACS+, RADIUS, FTP/SFTP

## Certifications

**North American**:
Safety (Listed & Certified, cTUVus mark)
  UL 62368-1
  CSA C22.2 No. 62368-1
EMC
  FCC Part 15 Subpart B Sections 15.107 & 15.109, Class A
  CAN ICES-003, Class A

## Measurement Accuracy

**Input Measurement Accuracy:**
LED Current = ± 10% at 0.1 amp (0.3 - 9.9 amps) and 1 amp (> 9.9 amps) resolution

GUI Current = ± 1% at 0.01 amp resolution (above 0.25 amp)
Voltage = ± 1% at 0.1 volt resolution (nominal ± 10%)
Active Power = ± 1% at 1 watt resolution
Apparent Power = ± 1% at 1 volt-amp resolution
Power Factor = ± 3% at 0.01 resolution
Crest Factor = ± 10% at 0.1 resolution
Energy = ± 1% at 0.1 kilowatt-hour resolution

**Output Measurement Accuracy**
GUI Current = ± 1% at 0.01 amp resolution (above 0.15 amp)
Voltage = ± 1% at 0.1 volt resolution (nominal ± 10%)
Active Power = ± 1% at 1 watt resolution
Apparent Power = ± 1% at 1 volt-amp resolution
Power Factor = ± 3% at 0.01 resolution
Crest Factor = ± 10% at 0.1 resolution
Energy = ± 1% at 1 watt-hour resolution

**Branch Measurement Accuracy**
Current = ± 3% at 0.01 amp resolution (above 0.5 amp)

## Optional Accessories

EMTH-2-10 Combination Temperature/Humidity Probe, 10ft (3m)
EMCU-1-1C Environmental Monitor adding:
- Two (2) EMTH-2-10 temperature/humidity ports (one probe included)
- One (1) EMWS-1-1 water sensor port (probe sold separately)
- Four (4) dry contact (NO/NC) monitoring points
- One (1) 8-bit analog-to-digital converter (0 to 5VDC)
KIT-PRO2LINK-01M or -01D provides ability to link (2) additional PRO2 units
KIT-SUS-01 StartUp Stick™ for rapid configurationMounting Brackets
- mounting brackets included
- See the Mounting Bracket Guide for further suggestions
- Custom mounting options available. Contact your local Server Technology representative
Cable Retention Devices for non-locking cords
- EZip
- Cable Sleeve

# Drawings

NOTES:

1. DIMENSIONS ARE IN MILLIMETERS AND [ ] ARE IN INCHES.

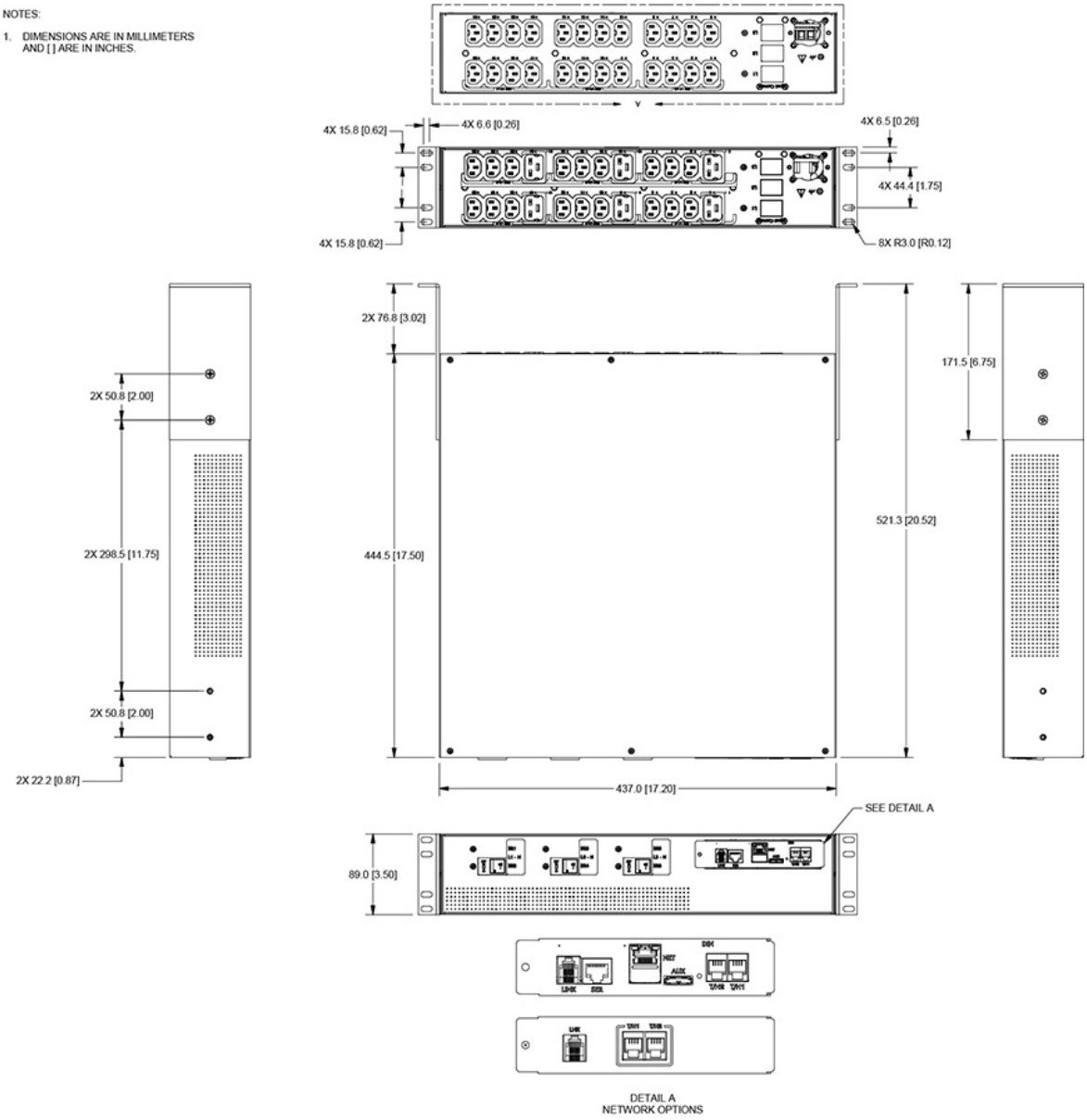

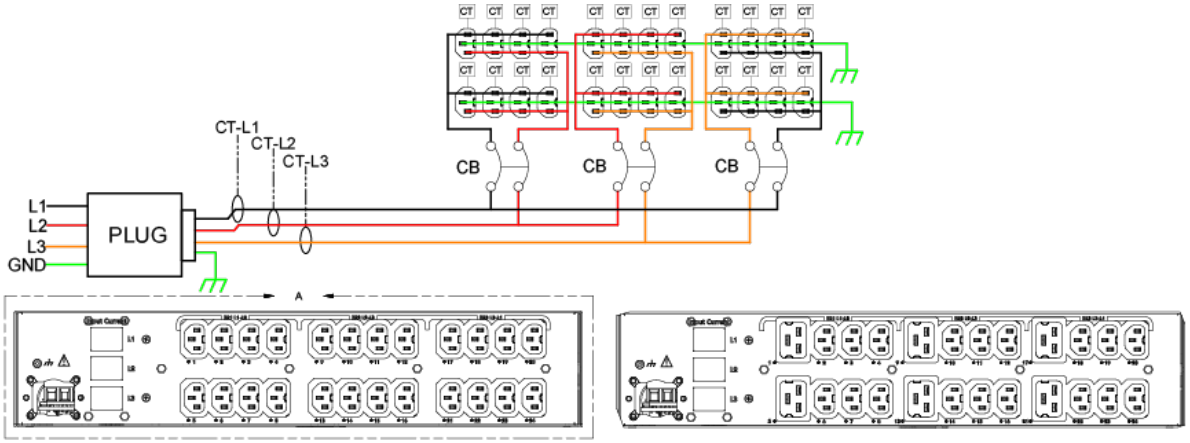


DETAIL A
(6)C19 (18)C13 MODULE

| Part Number | | Certification | Input | | Output | | |
|---|---|---|---|---|---|---|---|
| Master | Expansion | Rating Standard | Rating | Input Type | Total Output Rating | Outlet Type and Ratings | Branch Circuit Rating |
| C2WG24BN-DBLN5Dx | C2XG24BN-DBLN5Dx | cTUVus and/or cULus | 208V 3P+PE, 50/60Hz; 16A | NEMA L15-20P | 208V, 50/60Hz; <=27.7A | IEC 60320: C19 <=16A each, C13 <=12A each | 3 branches, each <=16A |
| C2WG24BN-DCLN5Dx | C2XG24BN-DCLN5Dx | cTUVus and/or cULus | 208V 3P+PE, 50/60Hz; 24A | NEMA L15-30P | 208V, 50/60Hz; <=41.5A | IEC 60320: C19 <=16A each, C13 <=12A each | 3 branches, each <=16A |
| C2WG24BN-YBLN5Dx | C2XG24BN-YBLN5Dx | cTUVus and/or cULus | 120/208V 3P+N+PE, 50/60Hz; 16A | NEMA L21-20P | 208V, 50/60Hz; <=27.7A | IEC 60320: C19 <=16A each, C13 <=12A each, NEMA 5-20R <=16A each | 3 branches, each <=16A |
| C2WG24BN-YCLN5Dx | C2XG24BN-YCLN5Dx | cTUVus and/or cULus | 120/208V 3P+N+PE, 50/60Hz; 24A | NEMA L21-30P | 208V, 50/60Hz; <=41.5A | IEC 60320: C19 <=16A each, C13 <=12A each, NEMA 5-20R <=16A each | 3 branches, each <=16A |
| Note: "x" designates code for number of C19 outlets of the outlet module | | | | | | | |

## Additional Information

**Warranty:** Server Technology offers a standard 2-year limited parts & labor warranty. Extended support is available at the time of purchase. See the Support Options on the website, or contact your local Server Technology representative for more information.

**Patents:** Information on Server Technology patents is available on the website at: www.servertech.com/products/patents

"Global" models are typically for use in countries outside of North America. Contact your Server Technology representative for more information about which models are appropriate for your application.

Information in this document is current as of time of publishing. Contact your Server Technology representative for the most up-to-date information. This datasheet was generated on: 19-Apr-2024

Interested in learning more about how Server Technology can help you manage and distribute power in your datacenter?
Visit us online at: www.servertech.com/products/

To contact an expert in your region, go to www.servertech.com/about-us/office-locations for more information.

servertech.com ©2024 Legrand. All rights reserved. The industry-leading brands of Raritan, Server Technology, Starline, and Ortronics empower Legrand's Data, Power & Control to deliver innovative solutions for data centers, building networks, and facility infrastructures.